ITEM	QTY	PART NAME	MATERIAL	PART NUMBER
1	1	HANDLE	CARBON STEEL	520-1520-CS
2	1	LOCK WASHER ASSEMBLY	CARBON STEEL	520-161-CS
3	1	BOLT	ALLOY STEEL	520-171-CS

NOTES:

1. THIS HANDLE IS DESIGNED FOR VALVES ASSEMBLED TO CLOSE WITH COUNTER CLOCKWISE SHAFT ROTATION.
2. BOLT ASSEMBLY TORQUE 60 FT. LBS. WITH LUBRICATED THREADS.
3. BOLT AND LOCK WASHER ARE USED TO SECURE HANDLE ON VALVE SHAFT.

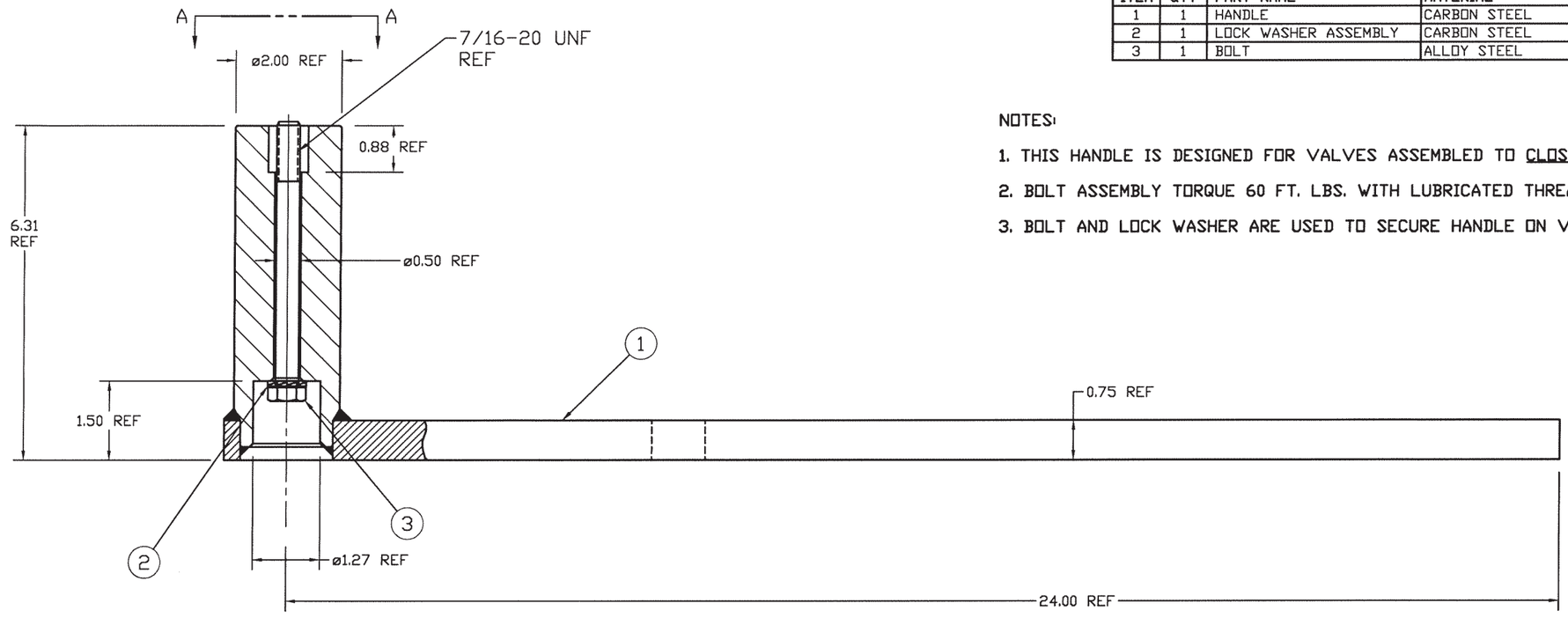

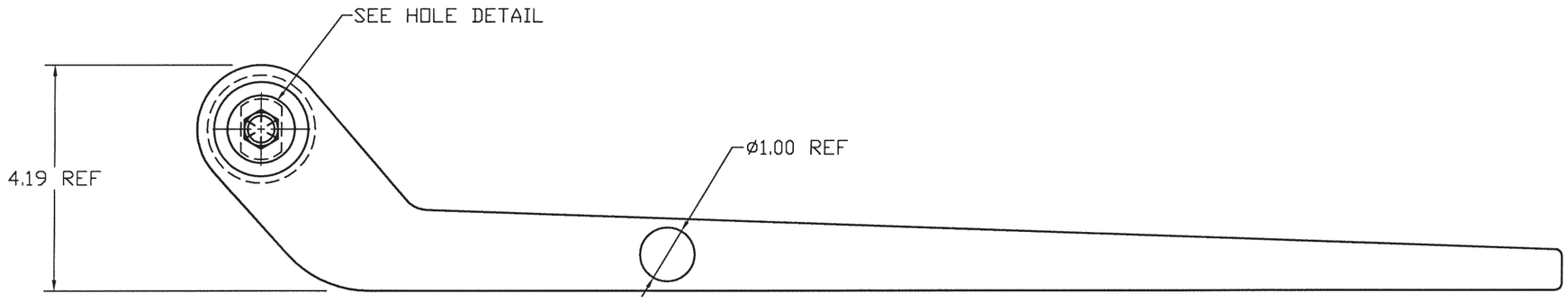

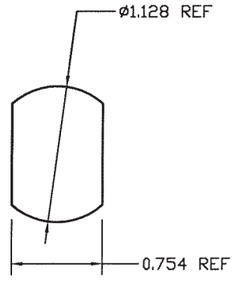

HOLE DETAIL
VIEW A-A

MIDLAND MANUFACTURING CORP.
SKOKIE, IL, U.S.A.

HANDLE, LONGITUDINAL, KIT

MATERIAL: STEEL	TOLERANCES UNLESS SPECIFIED: 2 PLACE DECIMAL ± .015 3 PLACE DECIMAL ± .005 ANGULAR ± 1°, FRACTIONS ± 1/64 CHAMFERS AND WELD PREP ±5°
REMOVE ALL BURRS. BREAK ALL EDGES & CORNERS.	FINISH (Ra) : √ = 125

SCALE: 1=2.5	DRAWN: CHP	DATE: 2-12-01	APPROVED: RHD

CAD FILE NO.	SIZE	DWG NO.	REV
520-152	B	520-152-CS	F