MATERIAL:
ALUMINUM (3" 4" 6")
DUCTILE IRON (3" 4")

OPW Engineered Systems

STYLE 30F SWIVEL JOINT–CAST

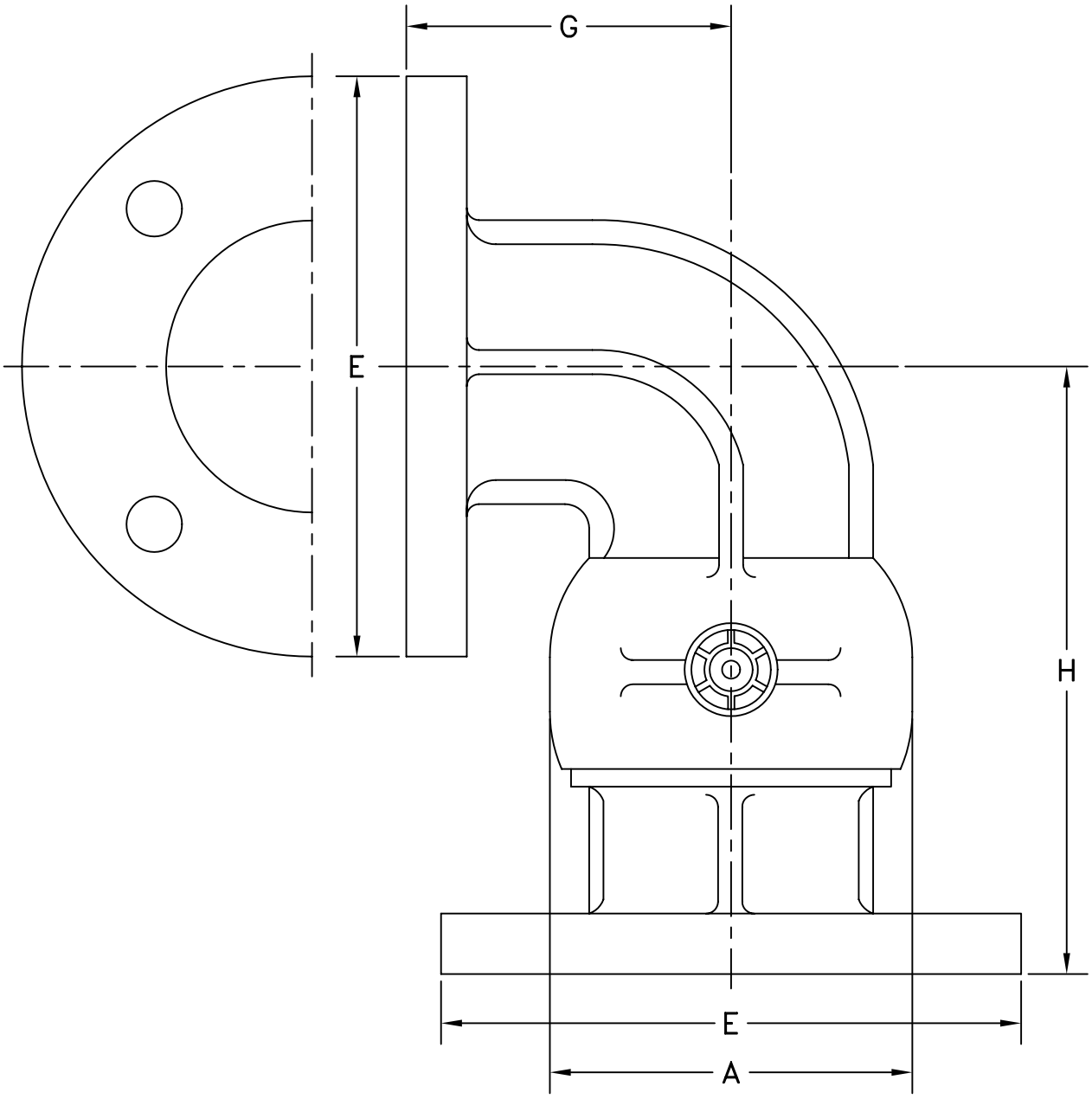

SIZE	3"	4"	6"
A	4–7/8"	6–1/16"	9–1/8"
E	7–1/2"	9"	11"
G	5"	6–1/16"	9"
H	6–13/16"	8–3/32"	12–7/8"
ø BOLT CIRCLE	6"	7–1/2"	9–1/2"
NO. BOLTS – ø	(4) 5/8"	(8) 5/8"	(8) 3/4"